REVISIONS			
NO	DESCRIPTION	APPROVED	DATE

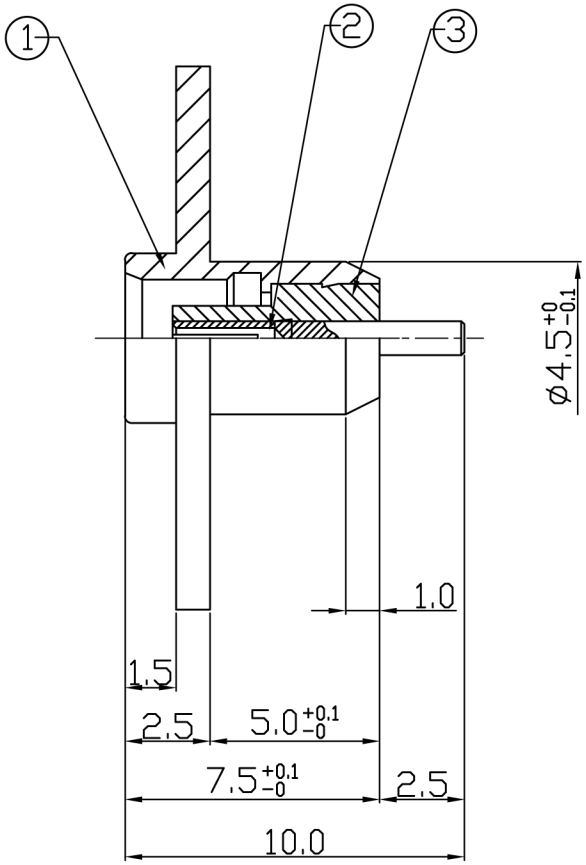

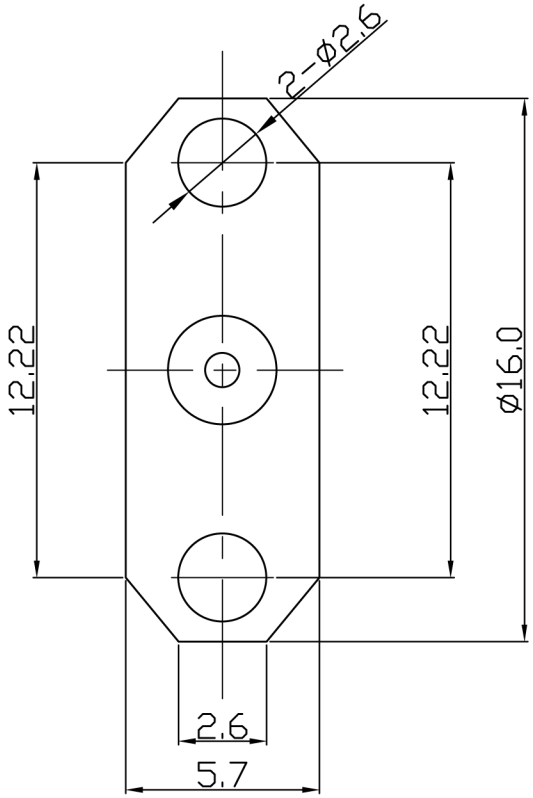

Impedance ..... 50 Ω
Frequency range ..... Dc ~ 6.0 Ghz
V.S.W.R ..... 1.2 : 1
Dielectric withstanding
- Voltage (at sea leavel) ..... 750 Vrms @ 50Hz
- Working Voltage (at sea level ..... ≤250Vrms @ 50Hz
Insulation resistance ..... ≥10000 MΩ
Center contact resistance .....≤5mΩ
Out contact resistance ..... ≥1mΩ
Temperature range ..... -65℃ ~ +165℃
Moisture resistance ..... MIL-STD202, Method107, Condition C
Corrosion ..... Saltspray Test acc.
MIL-STD-202, Method101, Condition B
Vibration ..... MIL-STD202,Method204,Codition D
Engagement force ..... ≤25 N / 5.6 lbs
Disengagement force ..... 8 ~ 10 N / 1.8~4.5 lbs
Contact caption ..... ≥10 N / 2.3 lbs
Durability (Matings) ..... ≥500

Connector parts	Material	Plating
Body	Brass	Gold
Center contact	Beryllium-Copper	Gold
Insulator	PTFE	White

NO	PART NO	NAME	Q.Ty	MATL	FINISH	REMARK
3	MCX58004-01	INSULATOR	1	PTFE	WHITE	
2	MCX55101-01	PIN	1	MBsBD	Au	
1	MCX50601	BODY	1	MBsBD	Au	

DATE	2000. 03. 02		RFAC Solutions	www.rfacsolutions.com
A4	SCALE N/S UNIT mm			
DR	CHK	APP	DWG NO	R320-024-000
C.S.H	D.Y.KO	H.S.LEE		
			DWG NAME	MCX(F)2HOLE (5.0X2.5)