REVISIONS			
NO	DESCRIPTION	APPROVED	DATE

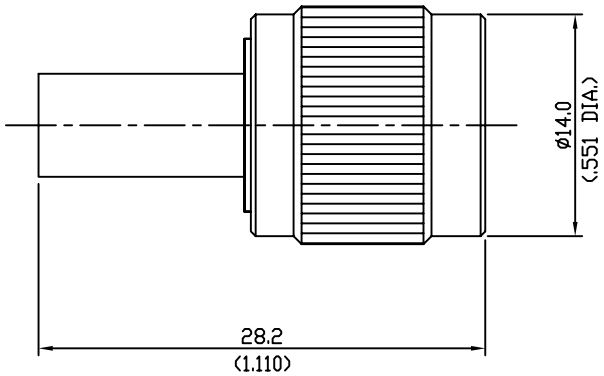

Impedance.....50Ω
Frequency range.....DC ~ 11GHz
V.S.W.R.....N/A
Dielectric withstanding
- Voltage(at sea level).....1500Vrms.50Hz
- Working voltage(at sea level).....≤500Vrms.50Hz
Insulation resistance.....≥5.10^{3}MΩ
Center contact resistance.....≤1.5MΩ
Out contact resistance.....≥1MΩ
Temperature range.....-65℃ ~ +165℃
Temperature shock.....MIL-STD202,Method107,ConditionB
Moisture resistance.....MIL-STD202,Method106
Corrosion.....Saltspray Test acc.to MIL-STD-202, Method101,ConditionB
Vibration.....MIL-STD202,Method204,ConditionB
Shock.....MIL-STD202,Method213,ConditionI
Coupling nut torque
- Recommended torque....46Ncm/69Ncm/4.1in.-lbs~6.1in.-lbs
- Coupling proof torque....170Ncm/15.0in.-lbs
Coupling retention force.....≥450N/101.2lbs.
Contact captivation.....≥27N/6.1lbs.
Durability(Matings).....≥500

Connector parts	Material	Plating
Bodys	Brass	Nickel
Cente contact	Brass	Gold
Insulator	PTFE	White

TOL.UNLESS NOTED
X = ±0.1
X.X = ±0.05
X.XX = ±0.01

DATE		
DRAWN BY		
DESINGNED BY		
CHECKED BY		
APPD.BY		
SCALE 1 : 1	UNIT mm	

RFAC Solutions www.rfacsolutions.com

TITLE TNC STRAIGHT PLUG (RG-400. 142. 223. 58)

DRAWING NO R370-006-000

SHEET 1 OF 1